NEW HORIZON COLLEGE OF ENGINEERING

Autonomous College Permanently affiliated to VTU Approved by AICTE
Accredited by NAAC with 'A' Grade

Department of Electrical & Electronics Engineering

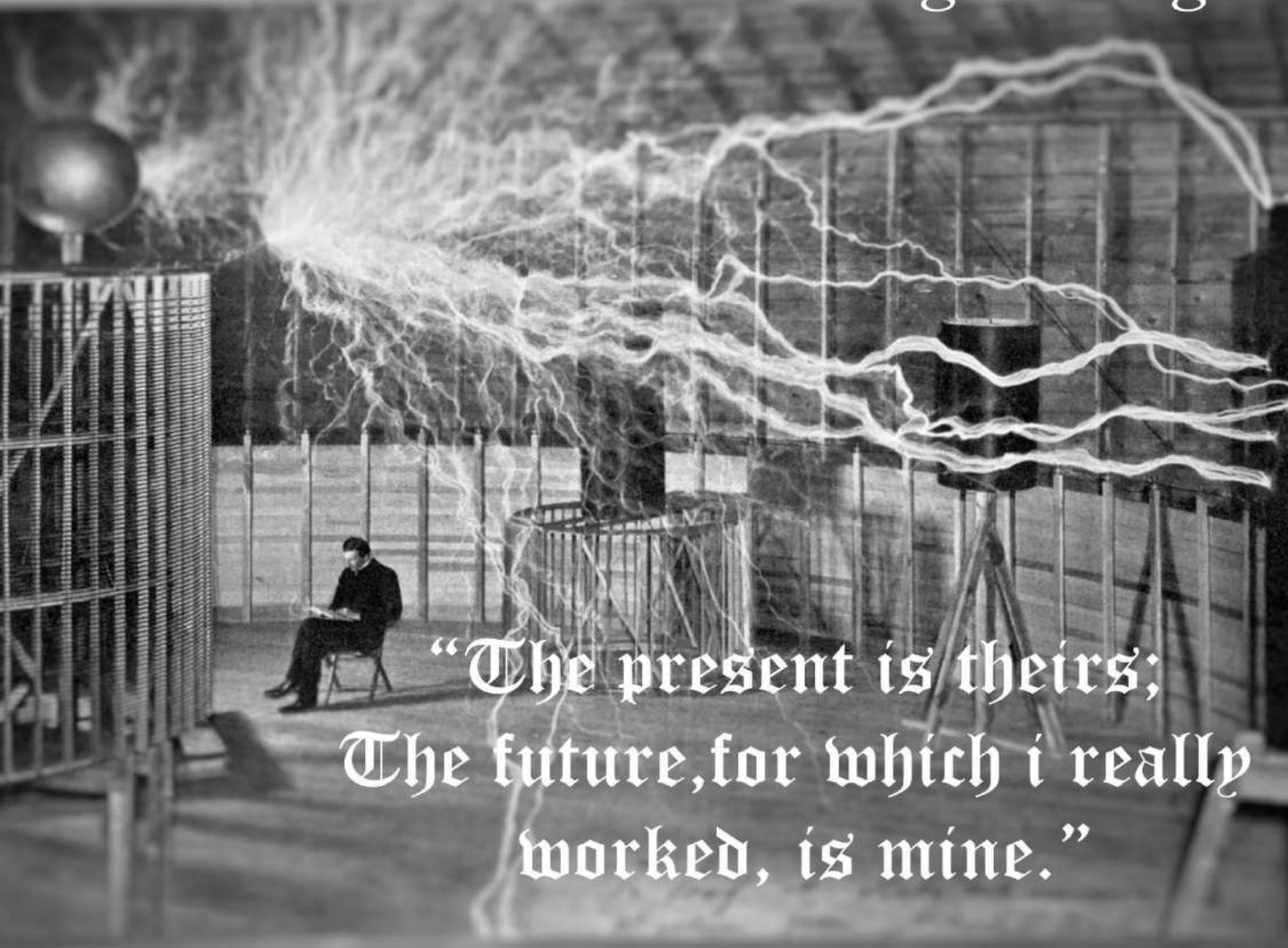

Spring TRONICALS

(BI-ANNUAL EEE MAGAZINE)

MAY, '17

newhorizonindia.edu/nhengineering/

CONTENT

MESSAGE FROM CHAIRMAN

It's pleasure to present my views for the biannual EEE magazine. The Department of Electrical and Electronics Engineering has always been one of the most active and happening Departments of our Institute and has brought us lot of pride over the past. The Institute as a whole has been undergoing very drastic reforms in terms of curriculum updation and course structure.

The EEE Department has taken up these readily which we hope will work for the benefit of the students. The new course plans have been applied to some of the senior years in UG apart from the first years as well, and we look forward to the feedback on the same to ensure we're moving on the right path. It is always good to see the students bring out their creative and hidden talents in any form and this would be a perfect platform for the students of the Department. This would also serve as an apt magazine for the sharing of technical articles by faculty and students from their respective areas of research. All the very best.

Dr. Mohan Manghnani

MESSAGE FROM PRINCIPAL

At NHCE, We understand that the need to teach beyond curriculum so as to make our students 'Industry Ready'. Recent observations made by many stalwarts in the industry indicate the fact that a majority of Engineering Graduates out of colleges are not employable. NHCE has always been in the forefront in ensuring that students are employable.

It gives me immense pleasure to pen a few words as prologue to the in-house magazine of the EEE department, Spring Tronicles. The issue is designed to present the events that have occurred as well as technical write-ups which makes the issue resourceful and informative. I congratulate all the contributors and also editorial board for bringing out such a nice issue. Happy Reading.

Dr. Manjunatha

MESSAGE FROM HEAD OF THE DEPARTMENT

With yet another release of this semesters issue of " Spring Tronicles". I am extremely delighted to acknowledge that the editorial team has done a stupendous job of subsuming all the key events which have taken place over the course of last few months. To Top it off, this Magazine includes major events witnessed by our department as well as Engineering Advances in the Electrical Field.

The essential objective of the Technical Magazine is to inform, engage, inspire and entertain a diverse readership – including students, faculty, parents and alumni- with a timely and honest portrait of our department activities. This issue has made an earnest attempt in this direction and all the credit for its success falls upon faculty and students who have worked with dedication and enthusiasm to bring the second issue forward. I convey my regards to all the readers.

Dr.R.Elumalai

MESSAGE FROM FACULTY ADVISOR

On Behalf of the Team, I am delighted on the launch of the second issue of " Spring Tronicles", on the eve of currents. The Clubs of EEE Department has played its instrumental role, this academic year as well, alike the previous years, through the year long activities of various workshops and social events.

The EEE Magazine has been experiencing a paradigm growth in the recent past and is now taking a new shape as a technical magazine adding a new flavour. I appreciate this initiative and wish whole heartedly that Spring Tronicles accomplish greater heights and wider reach. With no doubt I aspire the EEE students to take this association and the magazine to an elevated horizon. Wishing you a very great and successful venture ahead.

Dr.S.Sujitha

EDITORIAL TEAM

Faculty Advisor	• Dr. S.Sujitha
Student Co-ordinator	• Pradeep D N
Chief Editor	• Swaroop Kulkarni
Design Heads	• Viswajeet Gupta • Vaishnavi Salunke
Committee members	• Preethi Sinha • Preethu Nath

ABOUT DEPARTMENT

Electrical and Electronics Engineering is a continuously evolving subject. As technology has advanced, so have the challenge facing the modern engineer. EEE is a subject that naturally partners with other disciplines with whole new engineering avenues. From the very inception of the college in 2001,the Department of EEE offers four year full-time B.E program under three variants Global, Professional and Executive, affiliated to VTU with the intake of 60 students, now boast of 120 students per year. The Department is equipped with all the required laboratories, infrastructure and class rooms.

The B.E Degree program is designed to achieve a balance between depth of knowledge acquired through specialization and breadth of knowledge gained through exploration. The undergraduate degree courses offered by department provide a comprehensive foundation in the core topics of EEE coupled with an area of specialization relevant to emerging engineering challenges. The curriculum has been designed to create professional electrical and electronics engineers, who can serve the fields of core Electrical Engineering, information and communication systems, and other related fields.

VISION AND MISSION OF THE DEPARTMENT

VISION

To produce competent Engineers to excel in the field of Electrical and Electronics Engineering by providing necessary knowledge and skills through measurable and continuous improvement methods.

MISSION

To provide an environment in which both faculty and students can think critically and assimilate knowledge

- By imparting quality technical education for students to develop into globally competent technology professionals.
- By collaborating with industry, research organizations and academia to encourage creativity and innovation.
- By preparing graduates with positive attitude and ethical values.

PROGRAM OUTCOMES (POs)

Electrical and Electronics Engineering Graduates will be able to:

Engineering knowledge: Apply the knowledge of mathematics, science, engineering fundamentals, and an engineering specialization to the solution of complex engineering problems.
Problem analysis: Identify, formulate, review research literature, and analyze complex engineering problems reaching substantiated conclusions using first principles of mathematics, natural sciences, and engineering sciences.
Design/development of solutions: Design solutions for complex engineering problems and design system components or processes that meet the specified needs with appropriate consideration for the public health and safety, and the cultural, societal, and environmental considerations.
Conduct investigations of complex problems: Use research-based knowledge and research methods including design of experiments, analysis and interpretation of data, and synthesis of the information to provide valid conclusions.
Modern tool usage: Create, select, and apply appropriate techniques, resources, and modern engineering and IT tools including prediction and modeling to complex engineering activities with an understanding of the limitations.
The engineer and society: Apply reasoning informed by the contextual knowledge to assess societal, health, safety, legal and cultural issues and the consequent responsibilities relevant to the professional engineering practice.
Environment and sustainability: Understand the impact of the professional engineering solutions in societal and environmental contexts, and demonstrate the knowledge of, and need for sustainable development.
Ethics: Apply ethical principles and commit to professional ethics and responsibilities and norms of the engineering practice.
Individual and team work: Function effectively as an individual, and as a member or leader in diverse teams, and in multidisciplinary settings.
Communication: Communicate effectively on complex engineering activities with the engineering community and with society at large, such as, being able to comprehend and write effective reports and design documentation, make effective presentations, and give and receive clear instructions.
Project management and finance: Demonstrate knowledge and understanding of the engineering and management principles and apply these to one's own work, as a member and leader in a team, to manage projects and in multidisciplinary environments.
Life-long learning: Recognize the need for, and have the preparation and ability to engage in independent and life-long learning in the broadest context of technological change

PROGRAM SPECIFIC OUTCOMES (PSOs)

PSO 1: Graduates will be able to solve real life problems of power system and power Electronics using MiPower, PSPICE and MATLAB software tools and hardware.

PSO 2: Graduates will be able to develop and support systems based on Renewable and sustainable Energy sources.

WORKSHOPS ORGANISED BY EEE

Circuit Drafting Using Electrical AutoCAD on 1st Feb 2017

PLC Automation on 02nd Mar 2017

Industrial Automation on 09th Mar 2017

Solar Energy Harnessing on 24th Mar 2017

REVIT-MEP and PRIMAVERA on 30th Mar 2017

NATIONAL CONFERENCE /TECH FEST/SEMINAR

Energy Conservation Program during 20th Feb 2017 to 28th Feb 2017

Electro Horizon on 13th April 2017

National Conference on recent technologies in Electrical and Electronics on 19th April 2017

Tech Horizon-2017 on 27th May 2017

GUEST LECTURES

Dr. A. N Ravi, Retired Scientist, Central Power Research Institute, Bangalore	Mr. Phani Kumar, Project Manager, INTEL Corporation, Bangalore	Priyanka Kole,Assistant Professor,Dept of EEE,NHCE, Bangalore	Hemanth Maddhula, Hardware Engineer,Aruba Networks Pvt. Ltd.	Ms Roshini, Additional Director Zeonics Systech Pvt Ltd, Bangalore
Trends in High Voltage	ARM Processor	Simulation of estimation algorithms	Construction and Operating Principles Numerical Relays	Current Status of Wind Generation in India
VIII A and B	IV A and B	VIII A and B	VI A and B	VI A and B
28/04/2017	03/04/2017	23/03/2017	10/05/2017	11/05/17

HOW TO MAKE SOLAR CHARGER?

Solar mobile charger is a device which can charge mobile phones using solar radiation. Its major component is a compact solar panel. This solar panel traps solar energy and produces an output voltage. But, since the light radiations falling on the solar panel can vary, the output voltage becomes unstable. For charging a mobile phone, stable voltage is required. So, to make the output voltage stable and regulated, we use a voltage regulator circuit along with the solar panel.

Most of the mobile phones have computer connectivity via USB cable. USB port establishes 4 connection terminals. The connection terminals at the two extreme ends are the supply terminals. In a female USB connector (port via which we plug in USB devices to computer), these terminals carry 5V DC.

When a mobile phone is connected to the USB port of a computer, it utilizes this 5V supply to recharge battery. This feature is used in a solar mobile charger. It converts and regulates solar energy to 5V DC and the output will be available through the female USB connector. To this connector, we can easily connect a mobile phone via data cable.

Materials provided

1) Solar panel 2) Voltage regulator IC 7805 3) 100uF, 25V capacitor 4)10uF, 25V capacitor 5)100nF capacitor 6)PCB 7) Connecting wires 8)Stand 9)Switch 10) Screws etc

Let's start building

SOLAR PANEL

First of all, take the solar panel. Remove the black case, on its back side, we can see two connecting wires. One is in red colour and the other is in black. The red wire is the positive terminal and the black wire is the negative terminal.

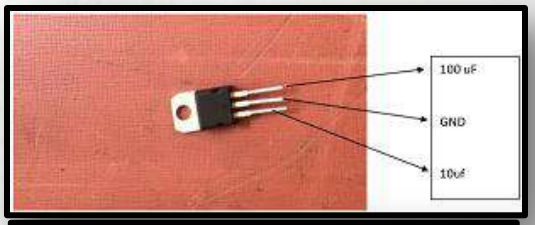

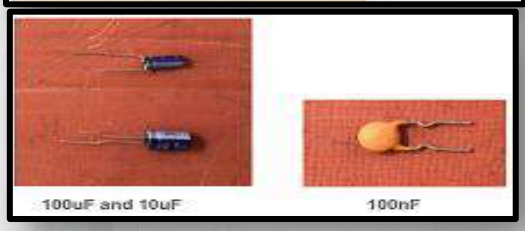

VOLTAGE REGULATOR

The regulator circuit consists of the following components.

1) IC7805

CAPACITOR

1)100uF- interim capacitor (to remove dips)

2) 10uF- to remove any spikes Low pass filter

3) 100nF – to remove any higher spikes, High pass filter

USB CHORD

The USB chord usually has 4 wires

1) Red- +ve wire

2) Black- -ve wire

3) Green- -ve Data chord

4) White- +ve Data chord

Steps to follow-

1. Solder all the components on a PCB as shown in the circuit diagram.
2. Solder wires from the solar panels, red for +ve and black for -ve
3. Connect the solar panel and check the output on the 100nF capacitor

Voltage V= 5 ± 5%

Current I= 0.5 A 10%

4. Connect the USB chord. In this circuit, we will connect the red to +ve of the 100n F output and the black and green will be shorted.

Leave the white alone.

5. Your circuit must be like this. Connect your phone and try it out!

DESIGN BY
ROSHNI Z SHOLAPURWALA
2012-2016 Batch
ALUMNI OF NHCE,EEE

INDUSTRIAL VISIT – SOLAR POWER PLANT

4th-A Industrial visit to "10MW grid connected Solar Power plant at Shivanasamudram, Belakavadi Village, Mandya district of Karnataka on 18th March 2017.

4th semester Students of Electrical and Electronics Engineering, New Horizon College Of Engineering, visited 10MW Grid connected Solar Power Plant in Mandya District on 18-03-2017.

The Salient Features of the Solar Plant Installed in Mandya District are as follows

Capacity: 10MW Grid Connected

Total Cost: 61.5 crores (approx)

Energy: 8.322 Mu/annum

Technology: Solar PV Crystalline

Evacuation System: Through 66KV dedicated line connecting 66KV Shiva MUSS.

Project allotted by: NVVN under JNNSM Phase-2, Batch-1 scheme at a tariff of Rs.11.69/-.

Average Solar Insolation: 5.26KWh per sq.m. per day EPC Contractor: M/s. BHEL & KPCL

Land acquired: 25 acres of Land in Shivasamudram in Mandya district.

Date of LOA: 24.05.2011

Date of Commissioning: 25.06.2012

BLOCK DIAGRAM OF SOLAR POWER PLANT

Installation Features

1 Module = 285 watts
20 Modules in Series = 1 String
16 Strings = 1 S M U
7 S M U = 1 Inverter

Each Module (panel) has a generation capacity of 285 watts, when 20 such modules are connected in series it forms one String. 16 Strings together is known as One Sting Monitoring Unit (SMU), the output of 7 such SMU's is given as input to one Inverter. One Inverter's output is 630kVA. There are two such Inverters.

The output voltage of each Inverter is stepped up to 11kv using step-up transformer. Transformer capacity is 1600 kVA. The distribution voltage connecting to grid is at 66kV. The complete process is observed & controlled in the control room using SCADA.

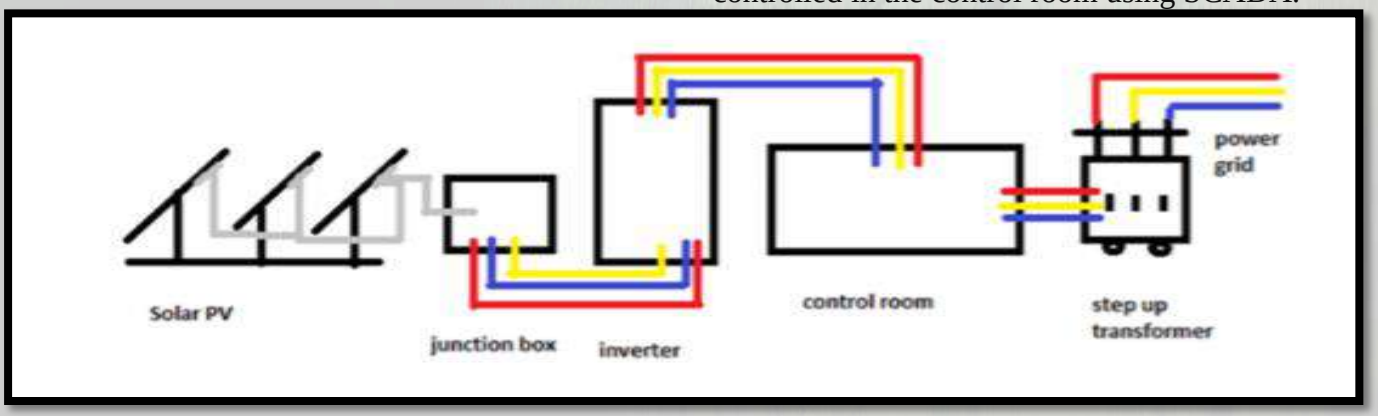

Kaustuv Majumder
2015-2019

VISIT TO MAHATMA GANDHI INSTITUTE OF RURAL ENERGY AND DEVELOPMENT

Department's Green Energy Club-Industrial visit for 6th semester students at "Mahatma Gandhi Institute of Rural Energy & Development, Srirampura Cross, Jakkur Bengaluru-560 064" on 21-04-2017

The visit to MGIRED by the 6th semester (EEE) students on 24/04/2017 had been a very good experience. As soon as we entered the institute we were taken to the seminar hall where we learnt about the history, activities and achievements of the institute. We were demonstrated about the importance of renewable energy and were made to realize the importance of a healthy environment and how we can contribute to reduce the pollution and adopt eco-friendly habits in order to save nature with help of innovation, awareness and use of technology. We were then demonstrated about the present scenario of energy demands and available energy resources. We were explained like how we can meet our energy demands by harnessing renewable energy sources and to look towards clean energy without polluting our environment.

We became aware about the energy issues of our country and the scope of solar energy at present and future. They also explained about the training programmes they conduct and guidance which they provide. After a short break, we were taken to the campus round–up.

We practically saw many machines which uses renewable energy and also understood how they work. We saw solar cooker, solar water heater, solardryer, a biogas plant, a small energy park, a swing which can produce power and machines which used only muscular energy to do various works like pumping water, grinding grains, to spray liquids etc. There was small solar power plant of capacity 20KW which is a grid connected one (system without batteries and power directly sold to BESCOM).

There are also many standalone systems which has batteries to store power. 95% of energy demands of the institute is powered by solar energy. A beautiful lake is the part of the campus which is well maintained by MGIRED. This visit to MGIRED enhanced our practical knowledge and helped us to seek new opportunities.

Madiha Ayub
2014-2018

VISIT TO "HOT LINE TRAINING CENTRE"

Industrial visit for 6th semester students - Two Days Skill Development Programme on Transmission Line Maintenance Organized by National Power Training Institute on 27th and 28th March 2017

The visit to Hot line training center at Kanakapura main road, Bangalore was organized on 27th and 28th of march 2017. It was Two Day Skill Development Programme on Transmission Line Maintenance Organized by National Power Traning Institute.

It was observed that HLTC has been imparting Live Line Maintenance Training on Transmission Lines, Switch Yards etc., using Hot Stick Method and Bare Hand Method since 1958. It has an established name in the Indian power sector among countries of SAARC and Middle East. For supply of Power without interruption to the consumer, Transmission Lines and Switch Yards must be maintained without taking outage. Hence the need of well trained Personnel to undertake Maintenance on Live Transmission Lines and Switch Yards, HLTC was set up under CWPC in the year 1958 - one unit each at Peenya, Bangalore and Ganguwal, Punjab. HLTC was brought under CEA in the year 1974. Inauguration of the HLTC at its Somanahalli complex was held in the year 2000. With effect from 1st April 2002, HLTC was merged with National Power Training Institute (NPTI) (An Apex body for Training) an organisation under Ministry of Power, Government of India.

A.N Sharath

2014-2018

INTERNATIONAL INDUSTRY VISIT TO GERMANY

Students of NHCE along with faculty members started their International trip to Germany on 1st February 2017.

There they visited Technical Institute of Munich and were a part of seminar based on aerospace works carried away by professors and expert.

Later they also witnessed scenic beauty of Austria, Mozart House, Oktoberfest, etc. They also visited to ALLIANZ ARENA, the second largest football stadium situated in Munich.

The Opera House had a street stretched with a wide array of shops. We also witnessed the making of AUDI car, a completely automated process. Overall the trip to Germany was worth cherishing journey in all the ways.

Smart Grid, IOT Technology and Networking

Smart grid is the terminology used to refer to a collection of technologies that eventually come together to add a layer of intelligence by taking advantage of network technologies. This is accomplished by gathering data from various grid components in near real time and putting that information into the hands of end users so they can make better decisions.

Accomplishing the flexible, dynamic operational environment requires that utilities:
Establish smart meters that can measure electricity consumption with precision and deliver that data back to utility operators through a network connection.
Deploy monitoring devices across the grid that notify users when equipment is damaged, broken or being impacted by adverse environmental conditions.
Establish lines of communication between these disparate devices.
Implement automated devices and machines that can analyze data being gathered across the grid in real time and automatically enact procedures in response.

Putting the IoT in a grid context

The Internet of Things could play a growing role in smart grid setups as the connected devices, APIs and other architectures underpinning the IoT can help grid operators successfully integrate data into everyday operations. IoT tools used in the utility sector can give operators ample devices to track operations across the grid. Specialized solutions will likely be needed for a wide range of applications, but the growing variety of IoT systems already on the market can help utilities set a stronger foundation for smart grid systems.

Establishing network infrastructure to support the smart grid

Since communications are central to the smart gird, some of the strategic network include:

• **Extended cable runs**: Utility operators will need to drive connectivity over long distances to support smart grid operations. Fiber-optic cables, and the media converters that let them interconnect with Ethernet systems, will play an essential role in moving data to IoT devices, substations and similar systems in distant locations.

• **Shielding**: Cables and network components will often be run in close proximity to electrical wires and equipment. Utility operators will need to shield and protect network components to ensure electromagnetic interference does not have an adverse impact on network performance.\

• **Harsh environmental conditions**: Network infrastructure supporting the smart grid will often reside in 2/3 locations where it will be exposed to adverse weather conditions, including extreme temperatures. Equipment must be hardened to withstand these conditions.

• **Integration with legacy or industry specific hardware**: Interconnecting Ethernet-based smart grid solutions with legacy or industry-specific communications systems at substations and similar grid locations often hinges on being able to interconnect serial and Ethernet systems. Terminal servers can pay off here by streamlining interoperability between components operating on different signal architectures.

Creating a network that is capable of supporting smart grid operations hinges on being able to interconnect.

Ethnic Day Celebration

REVELATION DAY

FAREWELL

International Women's Day "Khushi"

International Women's Day "Khushi"

PSLV-C37 Successfully Launches 104 Satellites in a Single Flight

In its thirty ninth flight (PSLV-C37), ISRO's Polar Satellite Launch Vehicle successfully launched the 714 kg Cartosat-2 Series Satellite along with 103 co-passenger satellites today morning (February 15, 2017) from Satish Dhawan Space Centre SHAR, Sriharikota. This is the thirty eighth consecutively successful mission of PSLV. The total weight of all the 104 satellites carried on-board PSLV-C37 was 1378 kg.

PSLV-C37 lifted off at 0928 hrs (9:28 am) IST, as planned, from the First Launch Pad. After a flight of 16 minutes 48 seconds, the satellites achieved a polar Sun Synchronous Orbit of 506 km inclined at an angle of 97.46 degree to the equator (very close to the intended orbit) and in the succeeding 12 minutes, all the 104 satellites successfully separated from the PSLV fourth stage in a predetermined sequence beginning with Cartosat-2 series satellite, followed by INS-1 and INS-2. The total number of Indian satellites launched by PSLV now stands at 46.

After separation, the two solar arrays of Cartosat-2 series satellite were deployed automatically and ISRO's Telemetry, Tracking and Command Network (ISTRAC) at Bangalore took over the control of the satellite. In the coming days, the satellite will be brought to its final operational configuration following which it will begin to provide remote sensing services using its panchromatic (black and white) and multispectral (colour) cameras.

Of the 103 co-passenger satellites carried by PSLV-C37, two–ISRO Nano Satellite-1 (INS-1) weighing 8.4 kg and INS-2 weighing 9.7 kg – are technology demonstration satellites from India.

The remaining 101 co-passenger satellites carried were international customer satellites from USA (96), The Netherlands (1), Switzerland (1), Israel (1), Kazakhstan (1) and UAE (1).

With this successful launch, the total number of customer satellites from abroad launched by India’s workhorse launch vehicle PSLV has reached 180.

Pavithra.N
2013-2017 Batch

Record-Breaking NASA Astronaut Peggy Whitson Sets New Record for Time in Space

NASA astronaut Peggy Whitson flew through the standing record for cumulative time spent in space by a U.S. astronaut at 1:27 a.m. EDT on April 24, and with the extension of her stay at the International Space Station, she racked up a new one.

Record holder is a familiar title for Whitson – she's held several over the course of her NASA career. In 2008, Whitson became the first woman to command the space station, and on April 9 became the first woman to command it twice. In March, she seized the record for most spacewalks by a female. Now, after launching on Nov. 17 with 377 days in space already under her belt, she's surpassed astronaut Jeff Williams previous United States record of 534 days, 2 hours and 48 minutes of cumulative time in space.

This is Whitson's third long-duration stay onboard the space station, and in March her mission was extended into September, increasing the amount of valuable astronaut time available for experiments on board the station. When she returns to Earth, she'll have spent more than 650 days in space, and decades supporting spaceflight from the ground.

Whitson began her NASA career in the 1980s. With a doctorate in biochemistry, she held a number of research-related positions, and in 1992 was named project scientist of the Shuttle-Mir Program. She also served as deputy division chief of the Medical Sciences Division at NASA's Johnson Space Center in Houston and co-chair of the U.S.-Russian Mission Science Working Group before being selected as an astronaut in 1996.

She made her first trip to the International Space Station in 2002. Space shuttle Endeavour delivered her and her Expedition 5 crewmates for a 184-day stay in the four modules that made up the space station at the time. While there, she took part in 21 science investigations and became the first NASA science officer. In 2008, Whitson returned as commander of Expedition 16, and was on hand for the installation of the Harmony node, the Columbus laboratory and the Kibo logistics module. She spent another 192 days in space and performed her first ever spacewalk .

Since returning for her third stay in November, Whitson added another three spacewalks to her list, bringing her total time spent outside the space station to more than 53 hours. With the title for most spacewalks by a female and most time spent spacewalking by a female already secure, she'll add more to both numbers. Between trips to space, Whitson was named chief of the astronaut office in 2009, becoming the first female to hold the position, which she remained in until 2012.

Chandana M
2014-2018 Batch

FEW COMMON INTERVIEW QUESTIONS FOR ELECTRICAL ENGINEERS

- Why did you choose Engineering?

Give a brief and convincing answer that will project you as a person with real passion for engineering.

- What are your areas of interests or subjects you like the most?

List down 3-4 key subjects you are really interested and strong at.

- Some basic engineering questions. (electronic circuits or devices or C programming or power system or databases or design).
- Some questions on computer aided tools or packages relevant to your engineering domain.

Pspice, Operating systems, Pro E, PCB design tools, electrical design etc.

- Have good clarity with practical knowledge about the projects you have listed in your resume.

You should have had hands on experience.

- Most technical interviewers do not look for perfect answer, but they just look out for the correct technical approach in your answer.
- If you don't know the correct answer, say "I am sorry, I don't remember or I don't know". Never ever try to cover it up or fumble upon the question.
- Be mindful on the language you use, try to use appropriate technical words and engineering jargon in your answer.
- Express interest in learning technology and be creative in explaining the concepts. Use metaphors for clarity and to explain your understanding.

Last but not the least, have great confidence and conviction on whatever you say in the interview.

CHAI WITH CO-ORDINATORS

1. HOW DID YOU FEEL WORKING ON THIS MAGAZINE?

WE HAD AN AMAZING TIME.IT WAS A GREAT FEELING WORKING AS A TEAM WITH FRIENDS AND RISING OUR POTENTIALS.

2. WHAT WAS THE EXPERIENCE WORKING WITH SENIORS?

THEY HELPED AND SUPPORTED US THROUGHOUT THE EVENT.WE WERE COMFORTABLE WITH THEM AND ALWAYS APPROACHED THEM FOR EVERY MINUTE DETAIL.

3. WHAT DID YOU LEARN?

THIS ENTIRE THING TAUGHT US MANY THINGS LIKE WORKING IN TEAM,MOTIVATING EACH OTHER AND IMPORTANCE OF RESPONSIBILITY.WE GOT TO KNOW MORE ABOUT ALL THE HAPPENNINGS AROUND US ALL OF THIS HELPED US IN DEVELOPING OURSELVES AND ENHANCING OUR SKILLS.

TIME OUT

PUNS

1. How did the two magnetic fluxes celebrate their strength?
By giving a high Φ.

2. Which letter of the English alphabet causes trauma to flip-flops?
H, because flip-flops are H-triggered.

3. Why couldn't the capacitor be confined in the hospital?
It kept getting discharged.

4. Why was the ac-dc converter in a pathetic condition?
It was a wreck-tifier.

5. Which phenomenon in Electrical Engineering exemplifies an oxymoron?
For-anti effect.

REBUS

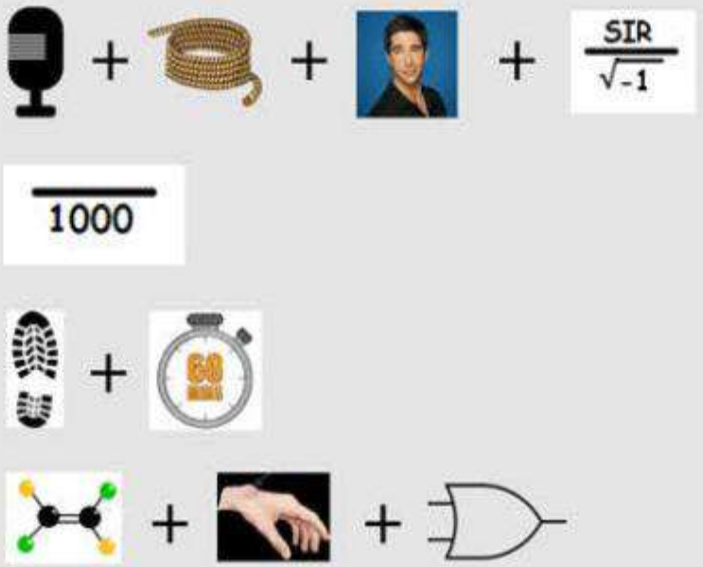

ANSWERS

MICROPROCESSOR
NORTON
SOLAR
TRANSISTOR

OUR PLACEMENT PARTNERS

accenture
Capgemini
Cognizant
DELL
GE imagination at work
Godrej
hp
IBM
ICICI Securities
imshealth
KPMG
L&T Infotech
Mindtree
Welcome to possible
NOKIA
TATA
TATA CONSULTANCY SERVICES
Tech Mahindra
VOLVO
WIPRO
Applying Thought
ITC INFOTECH
Business-friendly Solutions